DHBT Series

DHBT 650C 7D5

Technical datasheet

Dereike blower performance curves

Vacuum selection diagram curve

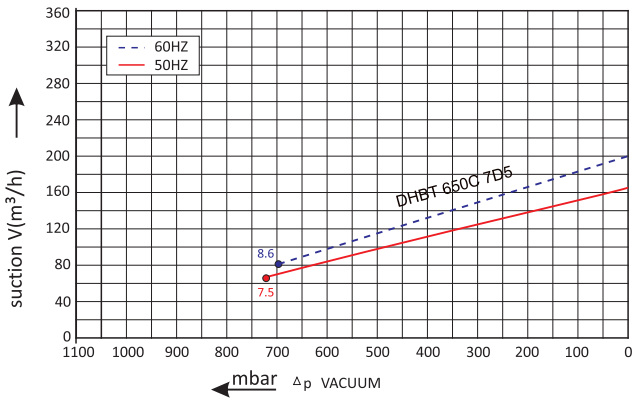

Compressor selection diagram curve

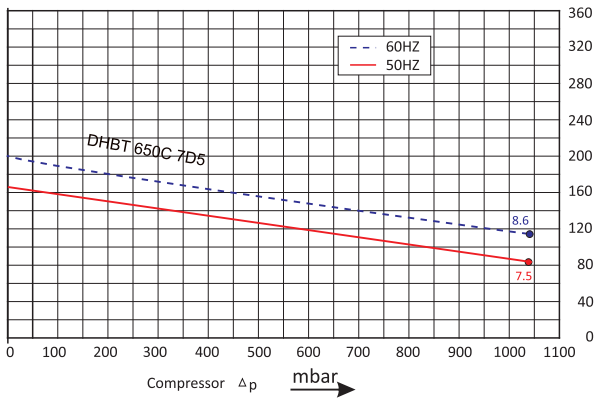

Dereike blower installation drawing

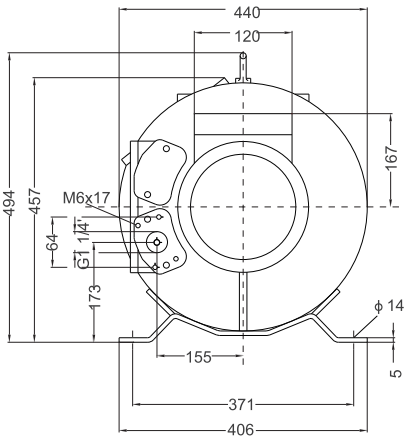

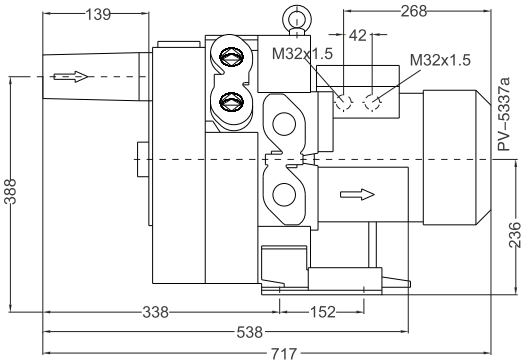

Dereike blower installation parameter

Model	Frequency	Output	Voltage	Current	Airflow	Pressure		Noise	Weight
	HZ	KW	V	A	m³/h	vacuum mbar	compressor mbar	dB(A)	
DHBT 650C 7D5	50	7.5	345-415△	16.0△	170	-730	1040	72	85
	60	8.6	380-480△	16.0△	200	-700	1040	76	85

The performance curves of Dereike blower is tested through below ways:

Under one atmospheric pressure, suck 15℃ air and then you can calculate the data, of course allow 10% difference, and when the sucked air and surroundings temperature are not higher than 25℃, you still can get total pressure difference as the curves shows.

Dongguan Dereike Intelligent M and E Equipment Co., Ltd

Address: Building 2, CaiBai Street 3, CaiBai Village, Daojiao Town,Dongguan City, 523170, China.

Mobile/Whatsapp/Wechat: 0086 13826960346 Email: info@dereike.com Website: http://www.dereike.com