# DHB Series
# DHB 520C 004

Technical datasheet

## Dereike blower performance curves

Vacuum selection diagram curve | Compressor selection diagram curve

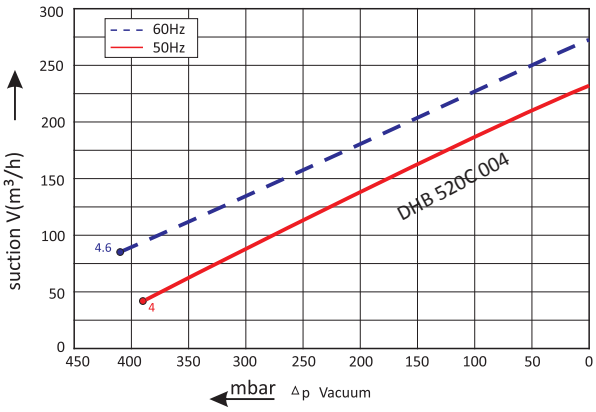


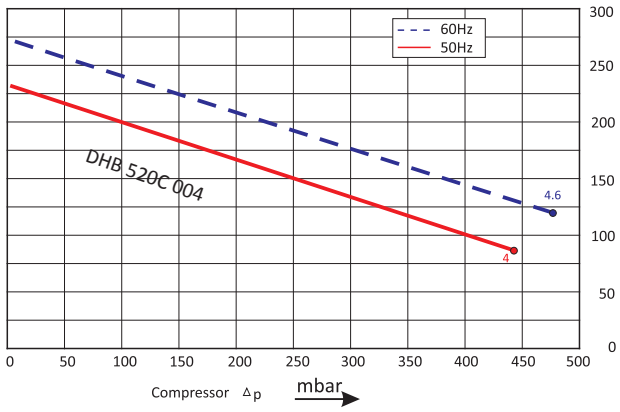


## Dereike blower installation drawing

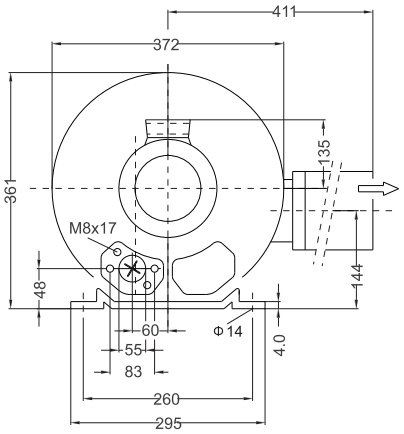


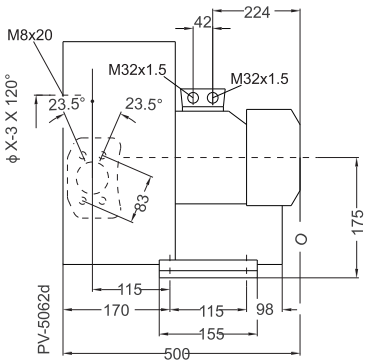


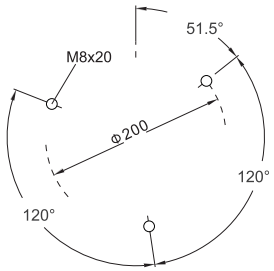


## Dereike blower installation parameter

| Model | Frequency | Output | Voltage | Current | Airflow | Pressure | | Noise | Weight |
|---|---|---|---|---|---|---|---|---|---|
| | HZ | KW | V | A | m³/h | vacuum mbar | compressor mbar | dB(A) | |
| DHB 520C 004 | 50 | 4 | 345-415△/600-720 | 10.0△/5.8Y | 230 | -390 | 440 | 72 | |
| | 60 | 4.6 | 380-480△/660-720 | 9.9△/5.71Y | 275 | -410 | 480 | 74 | |

The performance curves of Dereike blower is tested through below ways:

Under one atmospheric pressure, suck 15℃ air and then you can calculate the data, of course allow 10% difference, and when the sucked air and surroundings temperature are not higher than 25℃, you still can get total pressure difference as the curves shows.


Dongguan Dereike Intelligent M and E Equipment Co., Ltd
Address: Building 2, CaiBai Street 3, CaiBai Village, Daojiao Town,Dongguan City, 523170, China.
Mobile/Whatsapp/Wechat: 0086 13826960346 Email: info@dereike.com Website: http://www.dereike.com